USER MANUAL

Thank you for choosing Better Bathrooms.
Please read this manual before installing your product
and keep for future reference.

better bathrooms

Wall Hung Toilet

- Toilet seat and Wall Frame/cistern sold separately
- Waste pipe sold separately if a new installation

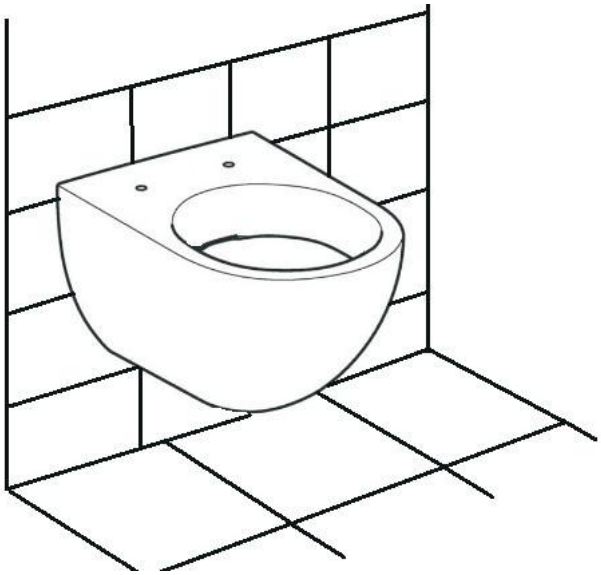

Please note: Image is for illustrative purposes only and may differ slightly to the actual product

- **Single-person assembly**
- **Tools required**
- **We always recommend using professional tradespeople to install your product**

V3_12.10.21

Congratulations on your purchase

And welcome to our growing gang of savvy shoppers

We're on a mission to bring you extraordinary bathroom products, for less. From modern to traditional style ceramics, plus the gorgeous fixtures, fittings and furniture to match. So, you can fall in love with your space every single day.

As one of the UK's largest independent bathroom stores, we've received countless awards; including the National Business Awards UK, the Digital Entrepreneur Awards and being placed on The Sunday Times Fast Track 100.

We hope your new product exceeds your highest expectations. However, if you experience any problems, please:

- log in to your account and contact our customer services team via your self-serve portal – betterbathrooms.com/CustomerAccount/Login

- contact us via betterbathrooms.com/content/contact-us

Important information

- Please read these instructions thoroughly and retain for future reference
- Always check for pipes and cables before drilling

Contents

- Parts 4
- Tools required 4
- Installation
  - Preparing for a Wall Hung Toilet Pan Fitting 5
  - Wall Hung Toilet Pan Fitting 6-7
- Troubleshooting 8
- Maintenance 8
- Cleaning 8

Parts

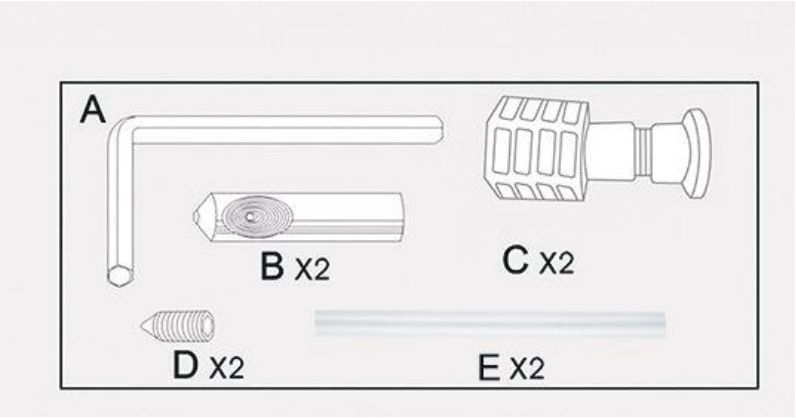

Toilet Pan

Fixing kit (below components)

A. Allen key

B. 2 x Threaded connector (fixing bolts)

C. 2 x Plastic wall mounting housing

D. 2 x Grub screw

E. 2xPlastic straw

Tools required

- Allen key (supplied)
- Silicone

Installation

Please note: Whenever possible and when safe to do so, it is recommended to carry out leak tests during the installation process

Preparing for a Wall Hung Toilet Pan Fitting

A – Flush pipe is supplied with the Wall Frame/cistern assembly, (Wall Frame/cistern sold separately).
B – Pan connector (waste pipe) supplied with Wall Frame/cistern assembly.

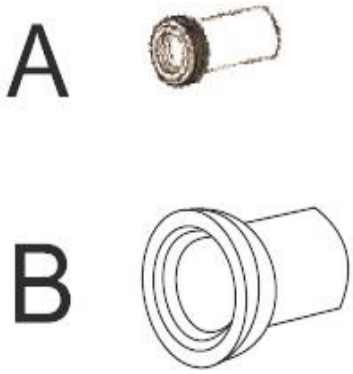

Please note: Pipes are not included.

Once you have received your toilet pan, this will allow you to prepare and install the Wall Frame/cistern (both sold separately). To install the Wall Frame/cistern, please use the instruction guides supplied with them.

This guide advises on installation of the wall hung toilet pan only.

Wall Hung Toilet Pan Fitting

After the wall frame has been set in the wall and the wall has been finished, the installation of the toilet pan to the frame can begin.

1. Prepare the pipes as advised (cutting of the flush pipe and pan connector may be required).
2. The threaded bars should be exposed from the frame through the wall, as shown below.

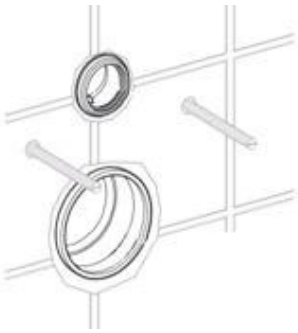

3. It is advisable to apply a small amount of lubricant (washing up liquid) to the flush pipe and pan connector to assist with fitting the toilet pan.

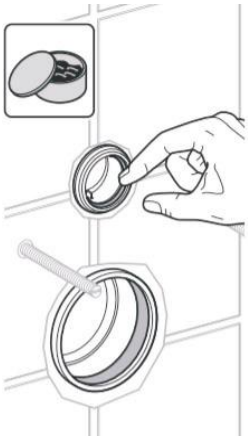

4. Connect the flush pipe and pan connector to the frame ready for connection to the toilet pan as shown, then screw the female threaded connectors (fixing bolts) onto the threaded bars so that the cut out aligns with the fixing hole in the toilet pan.

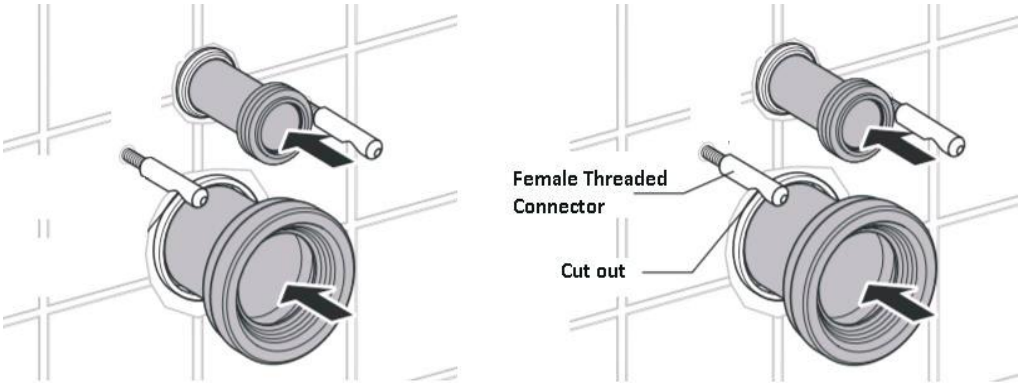

5. Insert the plastic wall mounting housing into the holes in the rear of the toilet pan and align the hole with the fixing hole on the top face of the toilet pan.

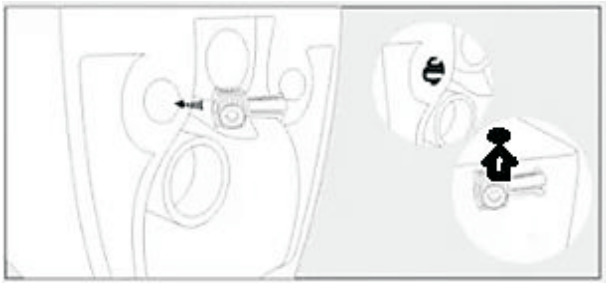

Please note: this next section will require two people

6. Push the toilet pan onto the wall frame ensuring that the flush pipe and pan connector fully engage with the toilet. (Image below shows the plastic housings fitted inside the toilet pan).

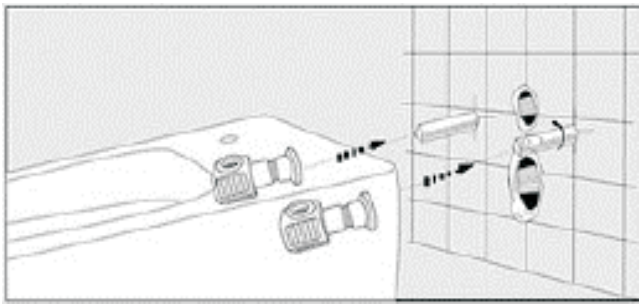

Please note: The cut out on the connector and the hole in the housing should be aligned.

Please note: On this version, the fixing hole is located on the top face, not in the side of the toilet pan

7. Using the Plastic straw secure the grub screw into the plastic housing then using the Allen key to secure the grub screw into the cut out on the connector to secure the toilet pan onto the frame.

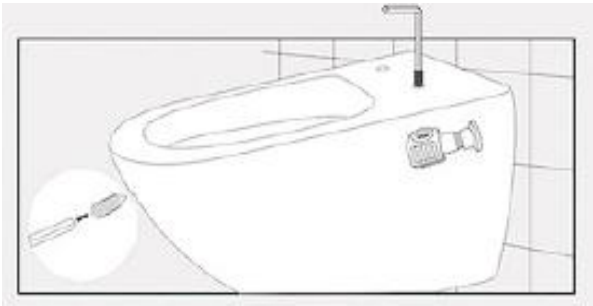

8. Once the installation is completed, a flush and leak test should be carried out and once it has been commissioned, the toilet can be sealed around the edge to finish.

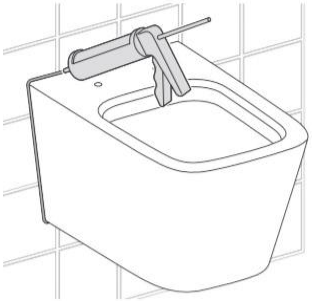

Troubleshooting

Flush volume into the pan, not sufficient

1. Adjust the flush volume level on the syphon.
2. Check that the syphon is opening correctly.
3. If none of these resolve the issue replace the syphon.

Water running into the pan continually after flushing

1. Establish if the water level in the cistern is reaching the overflow on the syphon, if it does reach the overflow adjust the inlet valve.
2. If this continues, replace the inlet valve
3. If the water level does not reach the overflow on the syphon, remove the top section of the syphon and check the washer for damage.
4. If the washer is damaged then replace.

Maintenance

All of the maintenance measures resulting from troubleshooting above requires you to access the internals of the cistern tank and for the water supply to be turned off. Please refer to the instruction guide supplied with your cistern for further guidance.

Cleaning

To maintain the surface finish of your product, wipe clean after every use, using a clean damp cloth, a mild detergent mixture can be used. Do not use abrasive cleaning agents or materials which can strip and scratch the surface; the use of these agents or materials can invalidate your guarantee.

For more information
- visit betterbathrooms.com
- email customerservices@buyitdirect.co.uk
- call 0330 390 3062
- write to Trident Business Park, Neptune Way, Huddersfield, HD2 1UA

better bathrooms

Part of the BuyItDirect Group

USER MANUAL

Thank you for choosing Better Bathrooms.
Please read this manual before installing your product
and keep for future reference.

better bathrooms

Top Fix Soft Close Toilet Seat

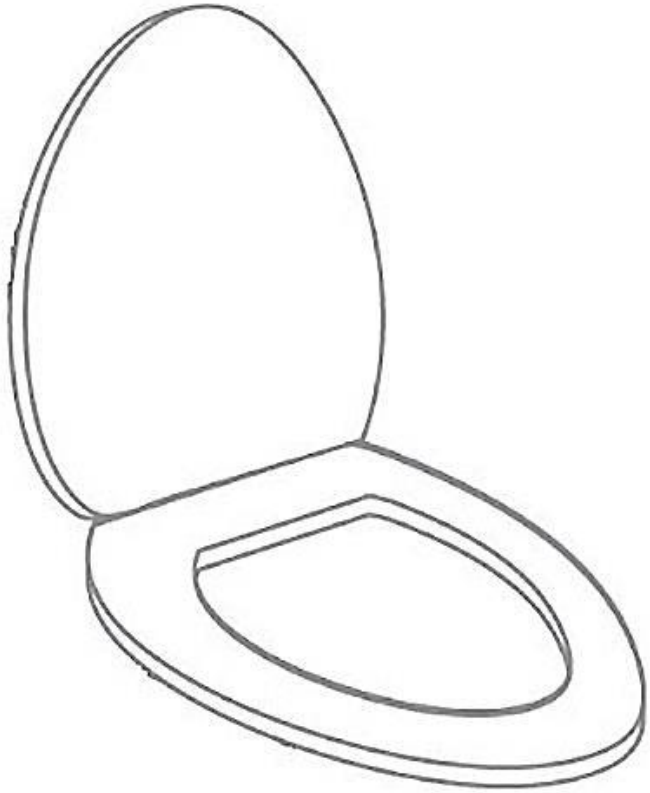

Please note: Image is for illustrative purposes only and may differ slightly to the actual product

- **Single-person assembly**
- **Tools required**
- **We always recommend using professional tradespeople to install your product**

V2_1.12.20

Congratulations on your purchase

And welcome to our growing gang of savvy shoppers

We're on a mission to bring you extraordinary bathroom products, for less. From modern to traditional style ceramics, plus the gorgeous fixtures, fittings and furniture to match. So, you can fall in love with your space every single day.

As one of the UK's largest independent bathroom stores, we've received countless awards; including the National Business Awards UK, the Digital Entrepreneur Awards and being placed on The Sunday Times Fast Track 100.

We hope your new product exceeds your highest expectations. However, if you experience any problems, please:

- call our friendly UK call centre on **0330 390 3062** (9am-7pm Monday to Friday, or 10am-4pm Saturday and Sunday), or
- send us a message via **customerservices@buyitdirect.co.uk**

Important information

- Please read these instructions thoroughly and retain for future reference
- Manufactured to BS EN 1254 – Specification for WC seats (plastics)

Parts

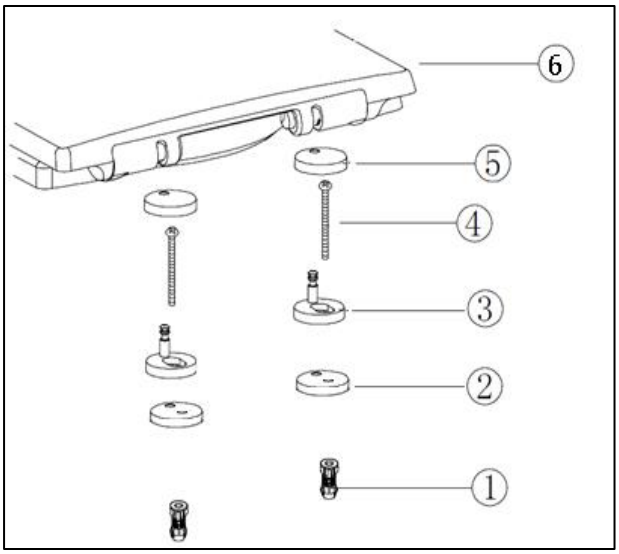

Please note that Parts are for illustrative purposes only and may differ slightly to the actual product

1. Expanding Plug
2. Gasket
3. Fitting Peg
4. Fixing Screw
5. Fitting Cover
4. Seat/Lid Assembly

Tools required

Screwdriver

Installation

1. Push the expanding plugs (part 1) into the holes on the toilet pan then place the gaskets (part 2) between fitting pegs (part 3) and toilet pan. Next, place the long screws (part 4) through the fitting pegs and gaskets and screw into the expanding plug (part 1).

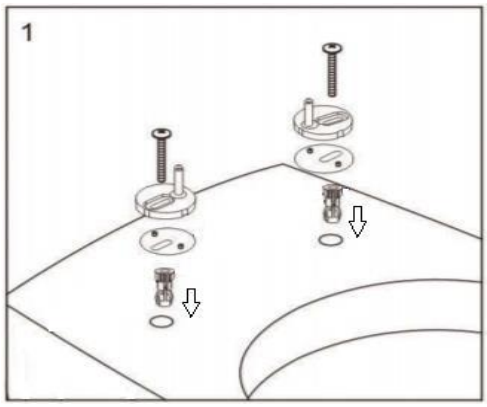

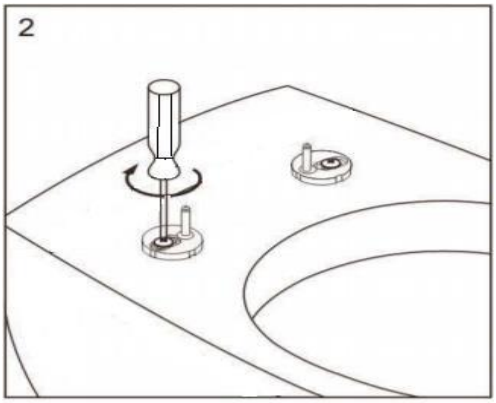

Please note: Fit the screws loosely and do not fully tighten at this stage

2. Turn the fittings on the toilet so that they align with the holes on the seat, then push the seat onto the pegs until it clicks into place. Gently move the seat so that it aligns on the toilet pan.

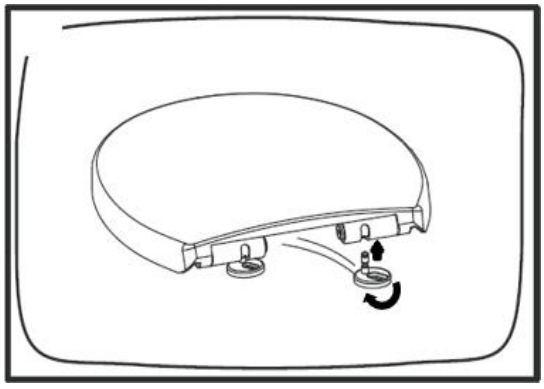

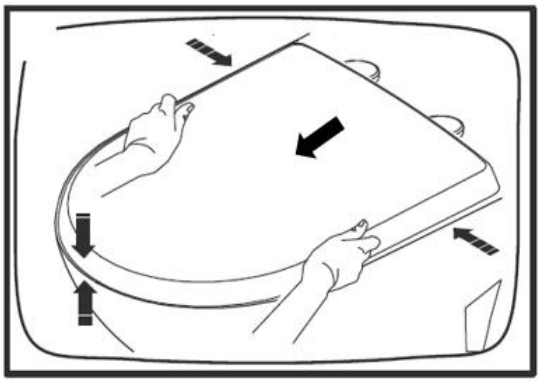

3. Once the seat is aligned, tighten the screws into the fittings (as below) then once the seat is secured, remove it by pressing both buttons and lifting away.

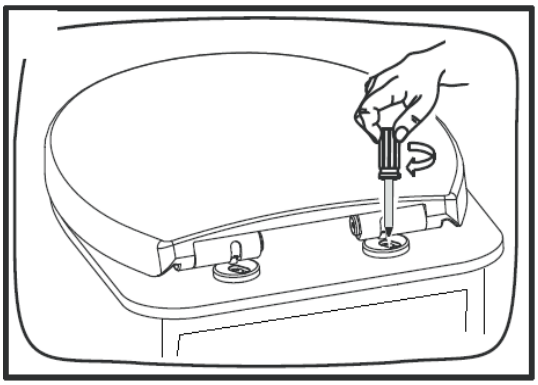

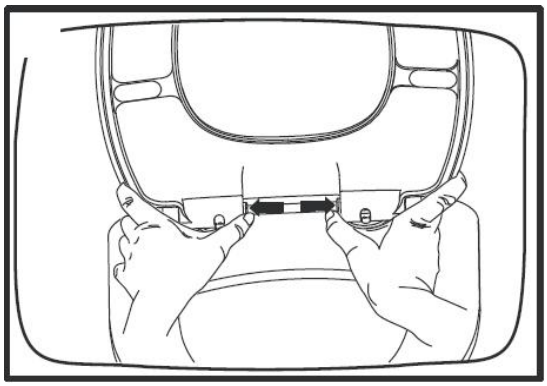

4. Place the fitting covers over the fixed fittings then push the seat onto the fitting pegs and click into position

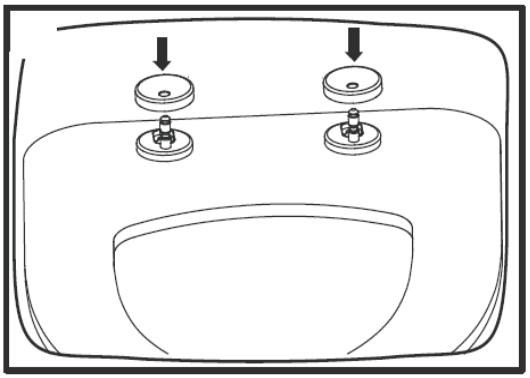

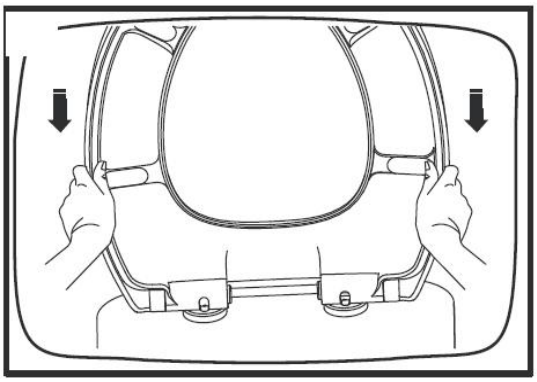

Using

During use do not force the seat closed as this will damage the soft close mechanism.

Pull the seat and/or lid towards you slightly until it reaches the point at which it will fall under its own weight, then release.

Do not stand on the toilet seat.

Cleaning

To maintain the surface of your product, wipe with a clean damp cloth and wipe dry, do not use any abrasive cleaning agents or materials.

It is recommended to wipe the seat and fittings on a regular basis.

Troubleshooting

Seat becomes loose after a period of use

Remove the seat and re-tighten the fittings.

Soft close mechanism stops working

The mechanism cannot be replaced, replace the seat and lid, however, the fittings can remain fitted. Removal of seat/lid is advised in Maintenance (below).

Seat is short or overhangs the toilet pan

Align the seat lid with the front edge of the toilet pan, the fittings are adjustable.

Maintenance

- To remove the seat/lid, press the two buttons at the rear of the seat and pull the seat/lid away from the fitting pegs. When replacing ensure it clicks into place.

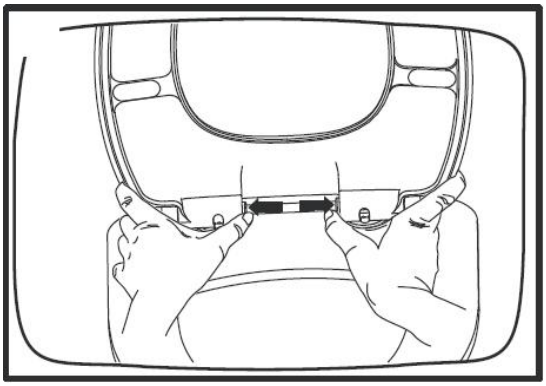

- To access the fixing screws, remove the lid/seat as above, then pull off the covers.

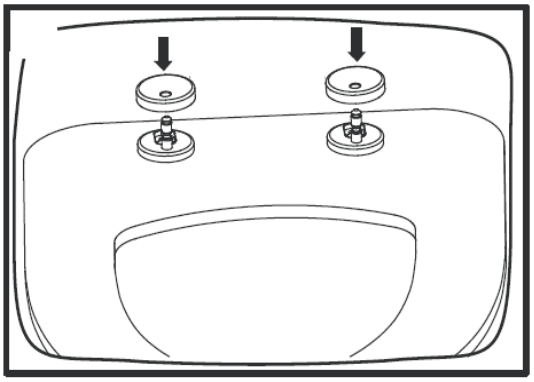

For more information
- visit betterbathrooms.com
- email customerservices@buyitdirect.co.uk
- call 0330 390 3062
- write to Trident Business Park, Neptune Way, Huddersfield, HD2 1UA

better bathrooms

Part of the BuyItDirect Group

USER MANUAL

Thank you for choosing Better Bathrooms.
Please read this manual before installing your product
and keep for future reference.

Wall Frame and Cistern

BeBa_25877

- For installation with Flush Plates - BeBa_26132 / BeBa_25874 / BeBa_25876 (sold separately)
- Toilet pan sold separately

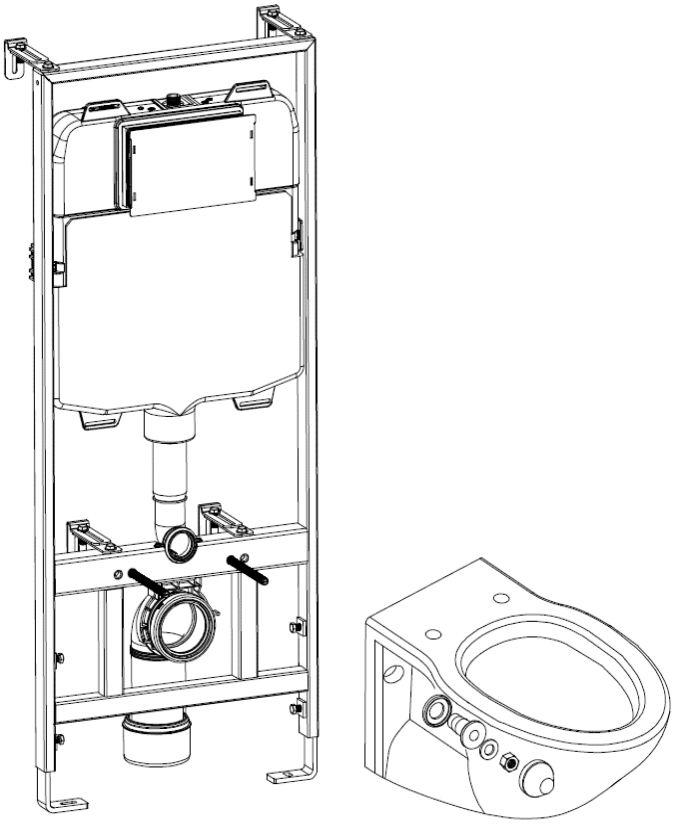

Please note: Image is for illustrative purposes only and may differ slightly to the actual product

- **Multi-person assembly**
- **Tools required**
- **We always recommend using professional tradespeople to install your product**

V1 30.4.20

Congratulations on your purchase

And welcome to our growing gang of savvy shoppers

We're on a mission to bring you extraordinary bathroom products, for less. From modern to traditional style ceramics, plus the gorgeous fixtures, fittings and furniture to match. So, you can fall in love with your space every single day.

As one of the UK's largest independent bathroom stores, we've received countless awards; including the National Business Awards UK, the Digital Entrepreneur Awards and being placed on The Sunday Times Fast Track 100.

We hope your new product exceeds your highest expectations. However, if you experience any problems, please:

- call our friendly UK call centre on **0871 244 0935** (9am-7pm Monday to Friday, or 10am-4pm Saturday and Sunday), or
- send us a message via **customerservices@buyitdirect.co.uk**

Important information

- Please read these instructions thoroughly and retain for future reference.
- Manufactured to BS EN14055 WC and urinal cisterns.
- All installation work must be carried out to comply with the Water Bylaw Regulations.
- The installation should be designed to allow access for maintenance.

CE

Contents

- Dimensions 4
- Parts 5-6
- Tools required 6
- Installation
  - Fitting Pan connector 7
  - Adjusting Frame Height 8
  - Securing the Frame 9
  - Fitting Protective Covers 10
  - Water Connection 11
  - Installation once wall is constructed 12-15
  - Connecting and Hanging the Toilet 16
- Troubleshooting 17
- Maintenance 18-19

Dimensions

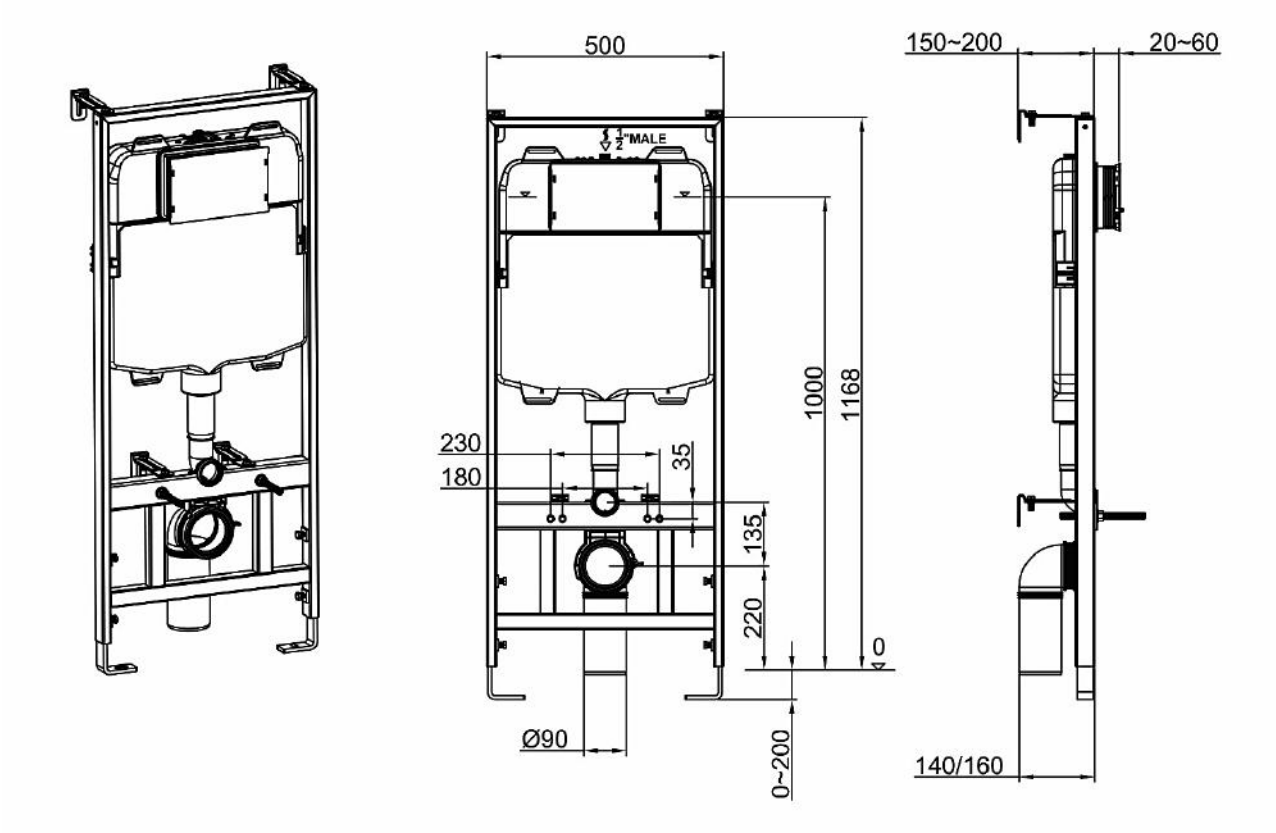
500
150~200
20~60
1/2"MALE
1000
1168
230
180
35
135
220
0
Ø90
0~200
140/160

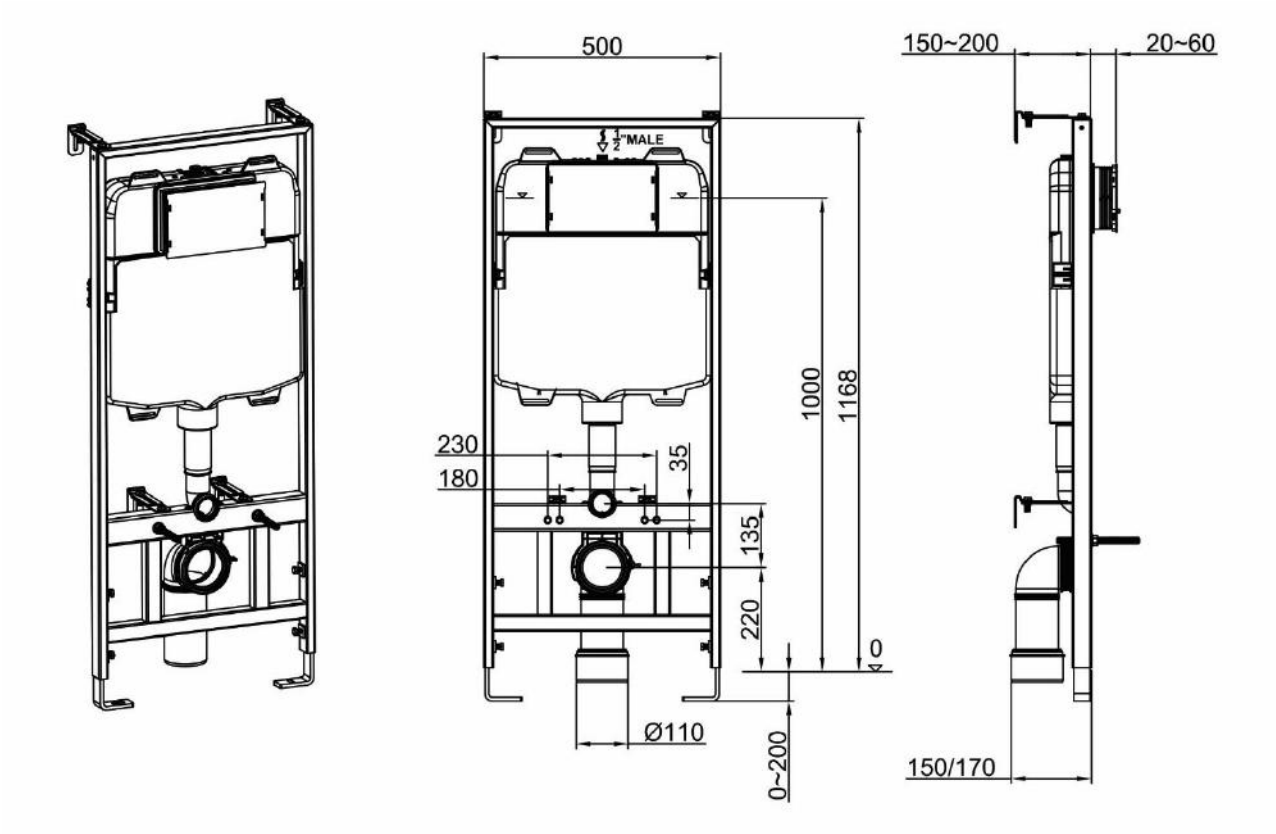
500
150~200
20~60
1/2"MALE
1000
1168
230
180
35
135
220
0
Ø110
0~200
150/170

Parts

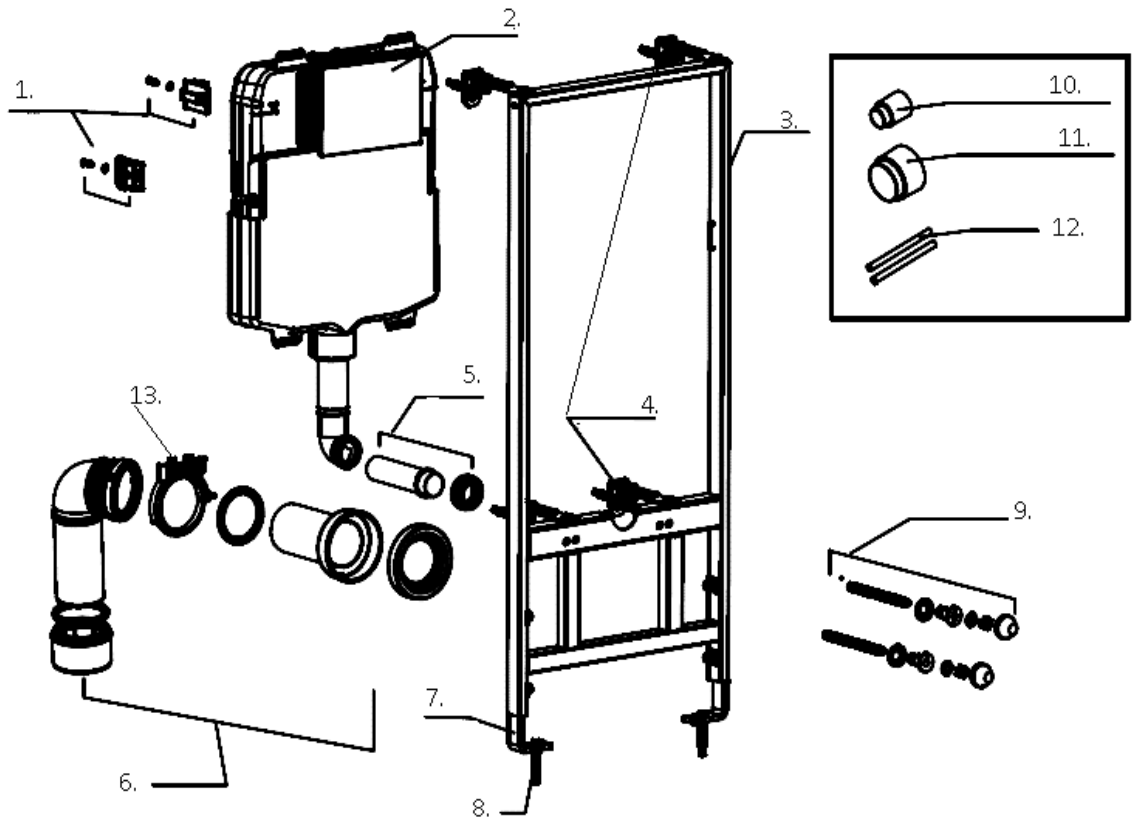

1. Square inlet fixing plate – Pre-fitted
2. Tank
3. Frame
4. Wall fixing brackets and screws
5. Flush pipe and bung
6. Pan connector and seals
7. Adjustable foot
8. Adjustable floor foot fixing screw and plug
9. Toilet fixings
10. Flush pipe protector, use during installation
11. Pan connector protector, use during installation
12. Fixing bar sleeves, use during installation 1
13. Pan connector clip
14. Stop Valve – Pre-fitted

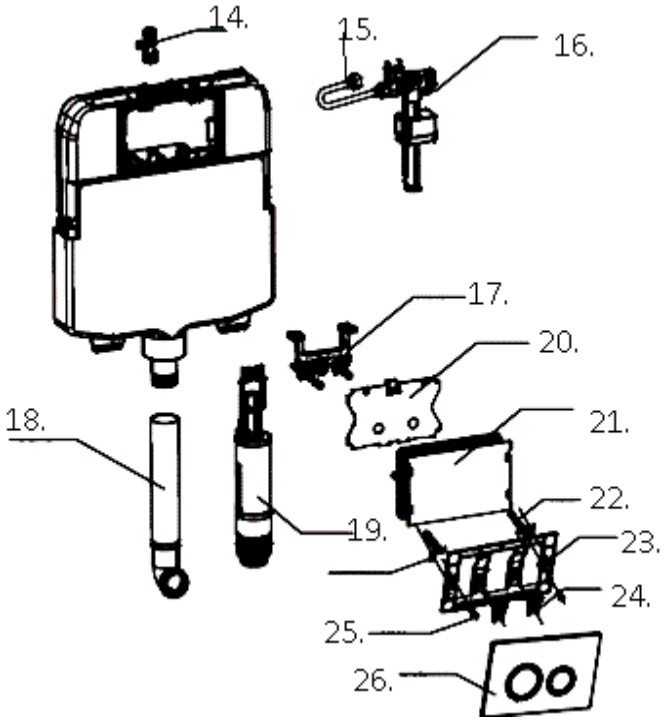

15. Inlet flexi-pipe – Pre-fitted
16. Inlet valve
17. Flush plate bracket
18. Flush pipe vertical
19. Syphon
20. Flush rod locating plate
21. Flush plate protective cover
22. Flush plate fixing rods
23. Flush plate housing
24. Flush plate housing/rod clips
25. Flush rods
26. Flush plate

Tools required

- Screwdriver
- Spanner
- Pencil
- Drill
- Sprit Level
- 10mm Drill Bit
- Hacksaw

Installation

Please note: Whenever possible and when safe to do so, it is recommended to carry out leak tests during the installation process

Fitting Pan Connector

If using a straight connector through the wall, you can position as required.

Each option below will give you the minimum dimension from the wall to the front of the fixing foot.

Please note: The desired location should be checked before drilling, that no pipes or wires can be damaged

Option 1: Pan connector to be installed into the floor

Position the connector into the frame clip in the position shown below left, located in the rear recess, then close the clip.

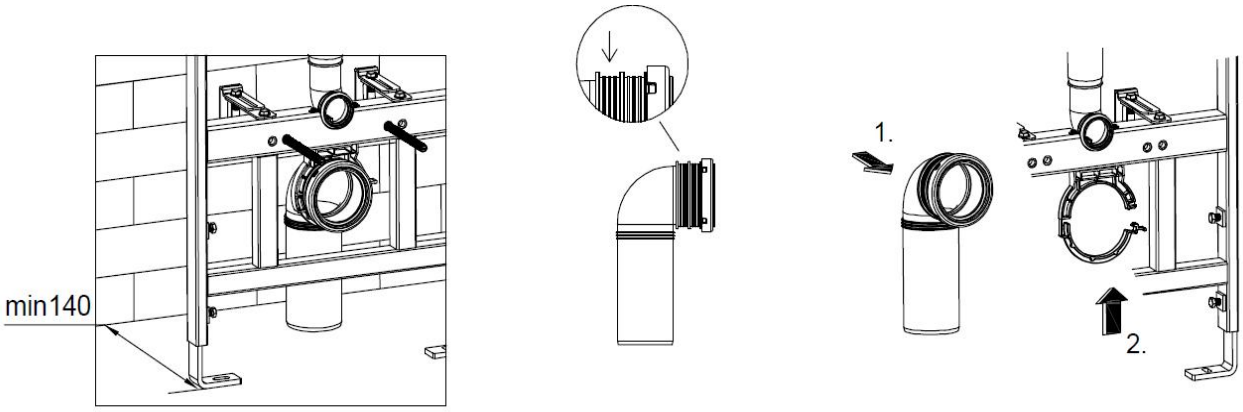

Option 2: Pan connector to be installed to the side

Position the connector into the frame clip in the position shown below left, located in the front recess, then close the clip.

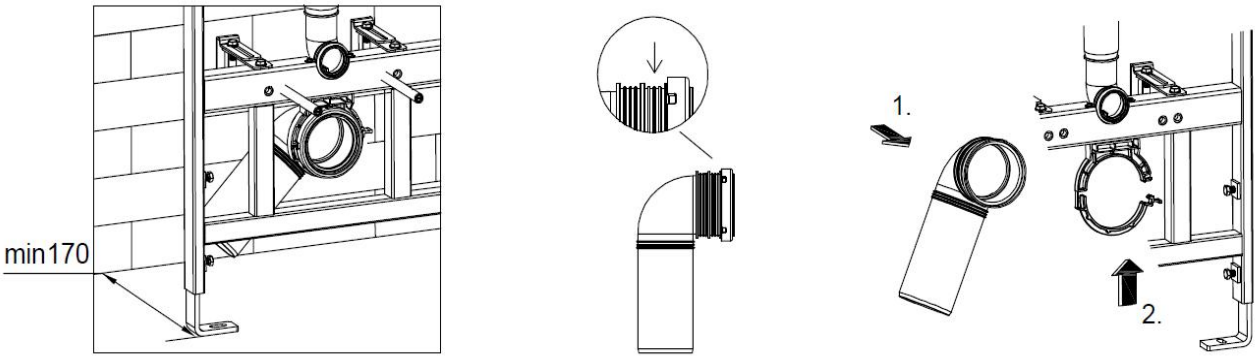

Below show the fixing width dimensions for the wall and floor screws, and the distance from the centre of the pan connector.

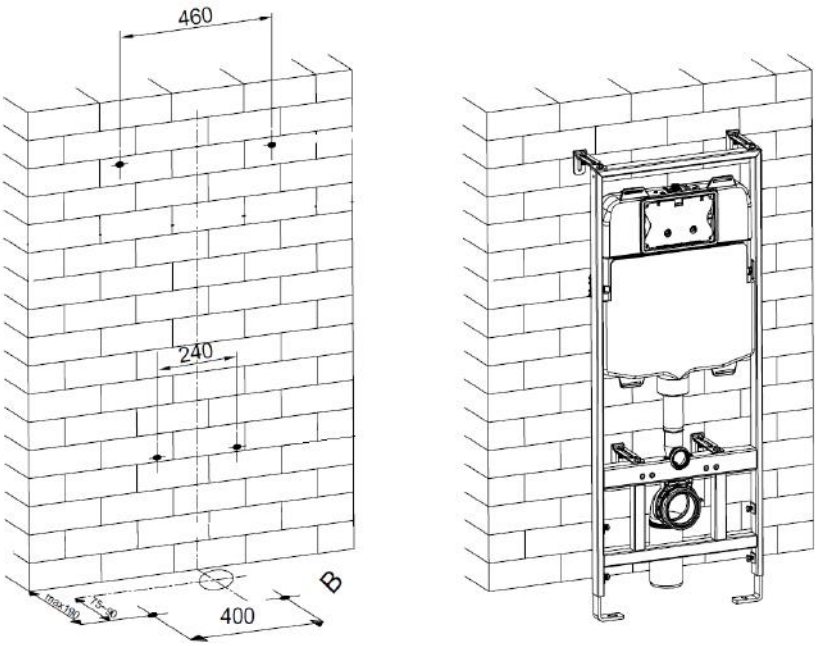

Adjusting Frame Height

Once the pan connector is in place, the height of the frame can be adjusted as required along with the depth of the frame from the wall.

1. To do this loosen the nuts and bolts in the fixing brackets and adjust as required.
2. Check the frame is level and then tighten the nuts and bolts.
3. Once the frame is set to the required height and depth, mark the drill holes on the wall, and on the floor. Now you're ready to secure the frame.

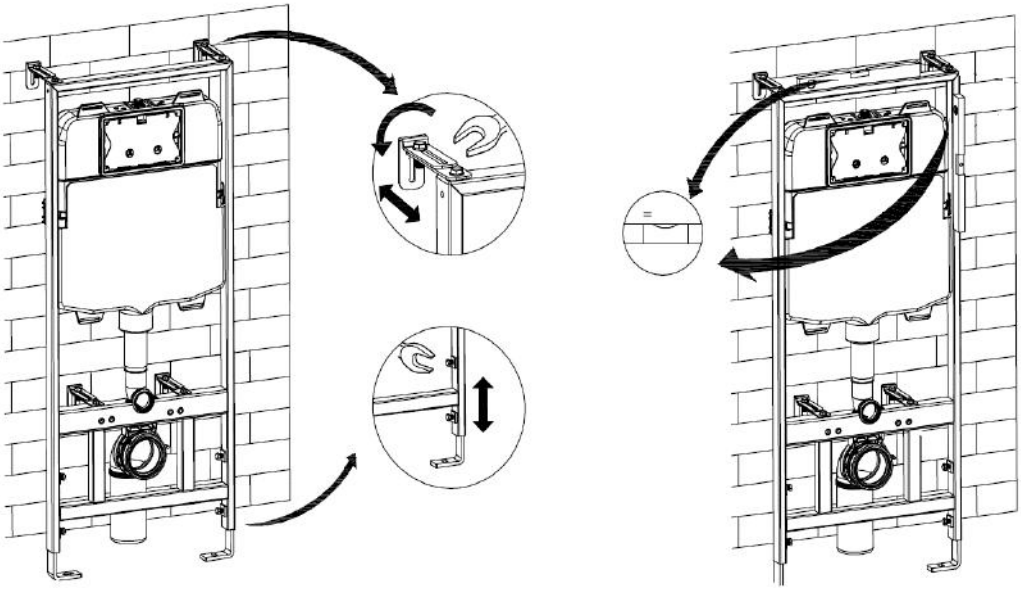

Securing the Frame

1. Drill the holes using a 10mm drill bit; it is recommended to place tape over the drill mark if you are drilling into tiles to prevent any slippage.
2. Once drilled, if fixing to a solid wall and floor, push the wall plug into the hole.
3. Secure the wall bracket to the wall and then position the frame into the required location.
4. Tighten the frame to the wall bracket and tighten the nut and bolt.
5. Secure the foot into position using the screws provided.

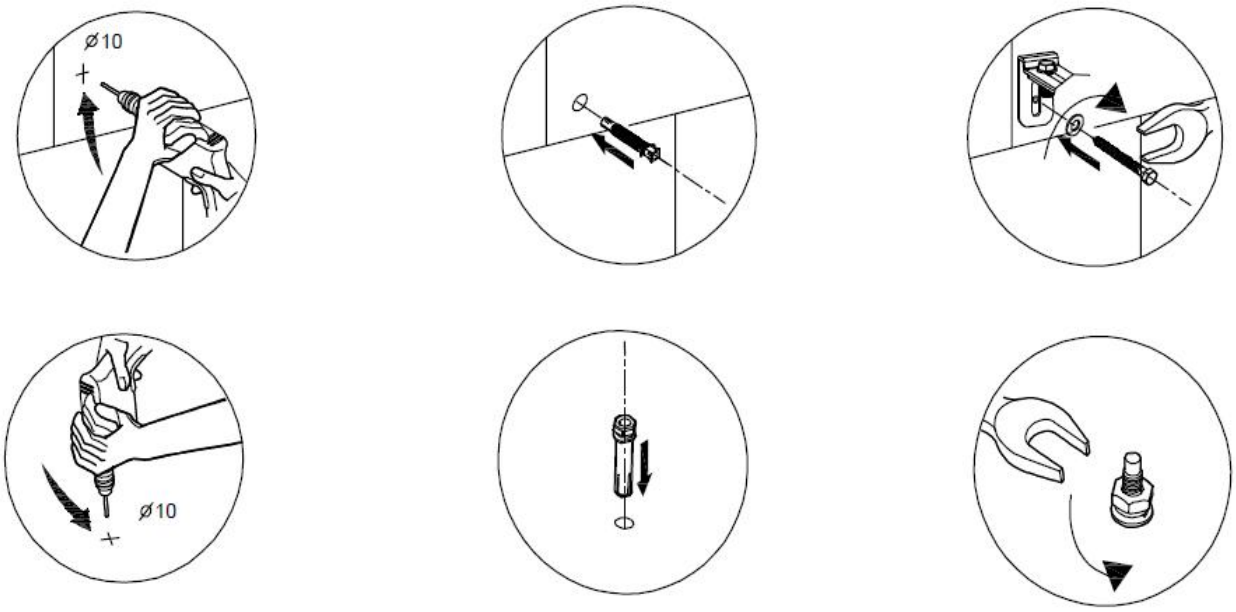

Fitting Protective Covers

Before building the wall, and tiling around the frame, the protective covers need to be fitted to the flush plate housing, flush pipe and pan connector and the fixing bars fixed into place.

1. Fit the flush plate fixing bracket (as below), then fit the flush plate fitting box.

Please note: The Flush Plate is sold separately

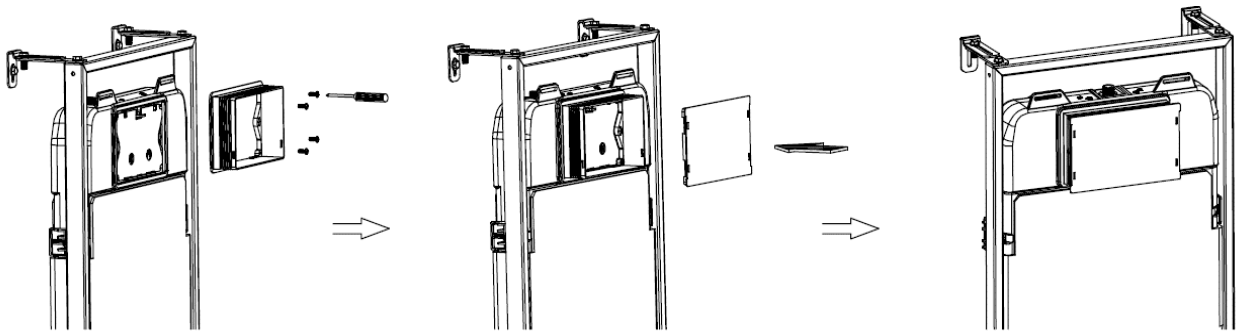

2. Push on the flush pipe and pan connector covers.
3. Screw the threaded bars into the frame, as below, ensuring these are in the correct hole to match the holes in the toilet, then push on the sleeves.

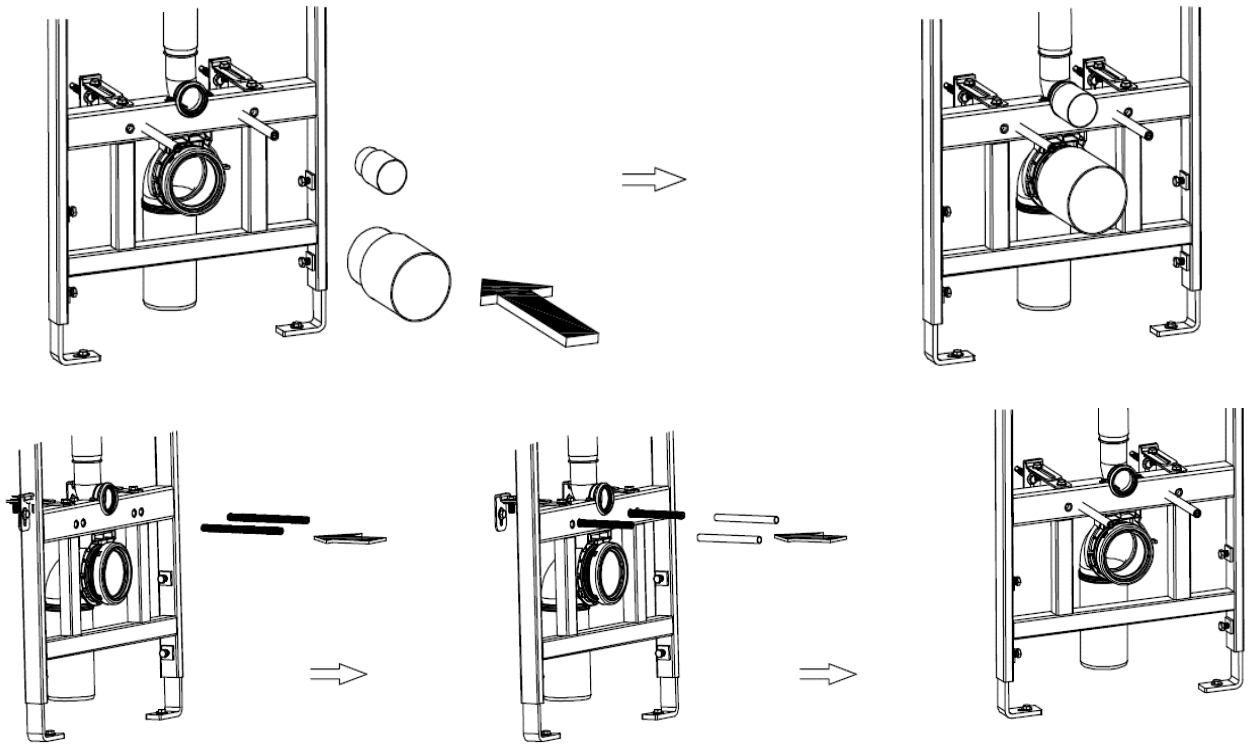

Water Connection

1. Make the connection between the water supply and the cistern tank, using a suitable sealing method as shown below.

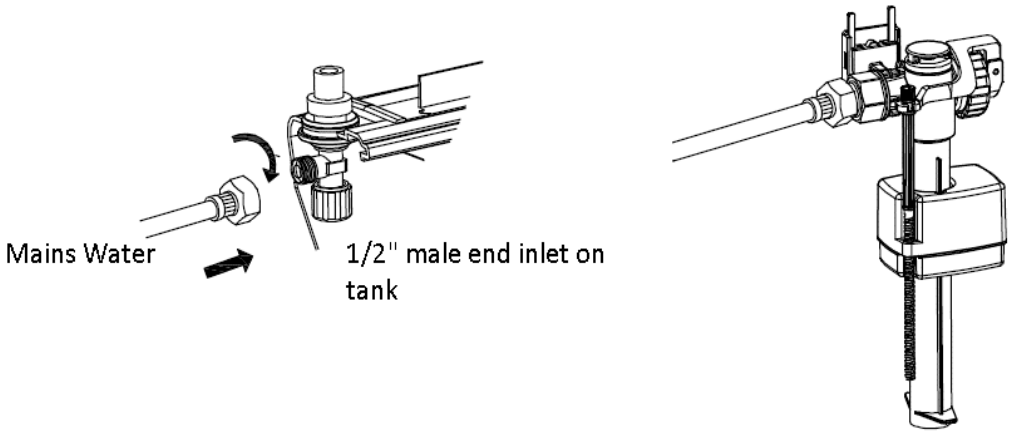

Please note: The cistern has its own built in stop valve

2. Once water is connected you're ready to build the partition wall. Use the guidance below and construct as required then tile as required.

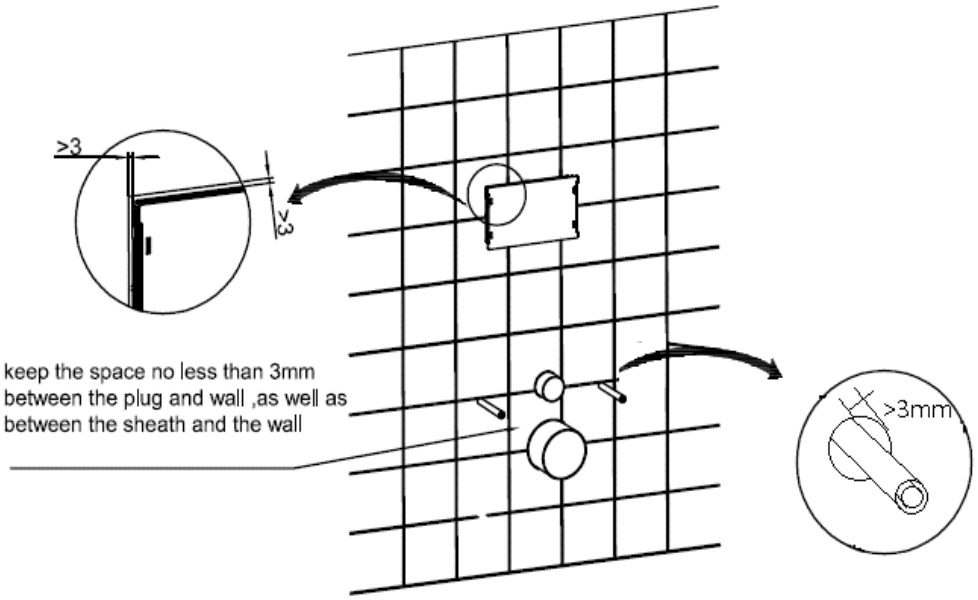

Installation once wall is constructed

1. Once the wall is constructed and tiled to the required depth, cut the flush plate box to the finished wall surface.
2. Insert the fixing rods into the holes within the frame flush box and twist to secure.

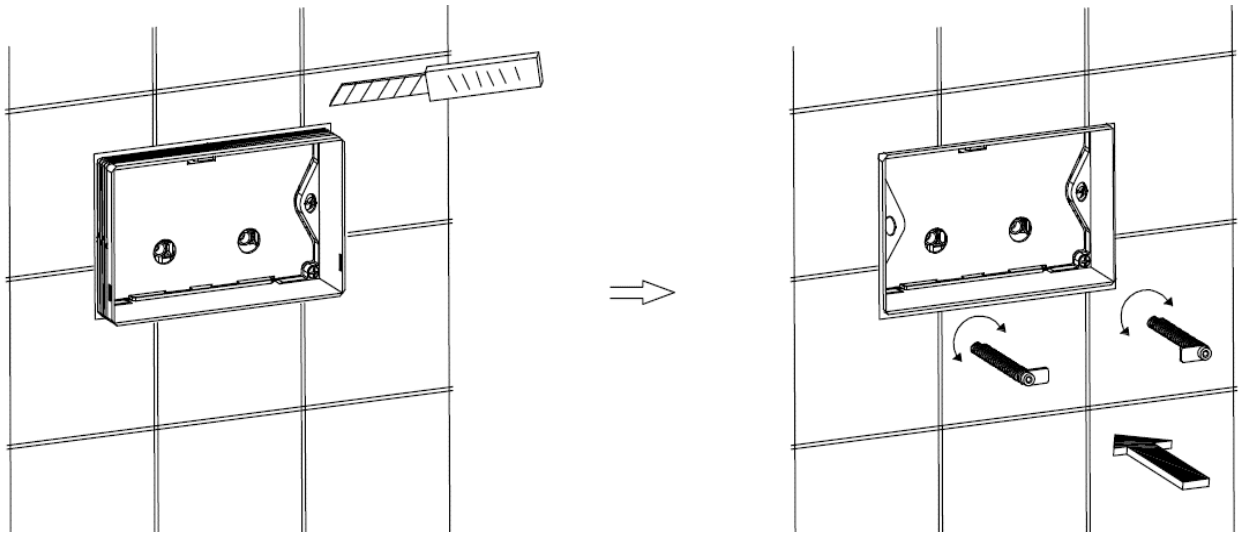

3. Secure the flush plate bracket to the fixing rods and secure using the screws provided.
4. Push the flush rods into the housing as shown below.

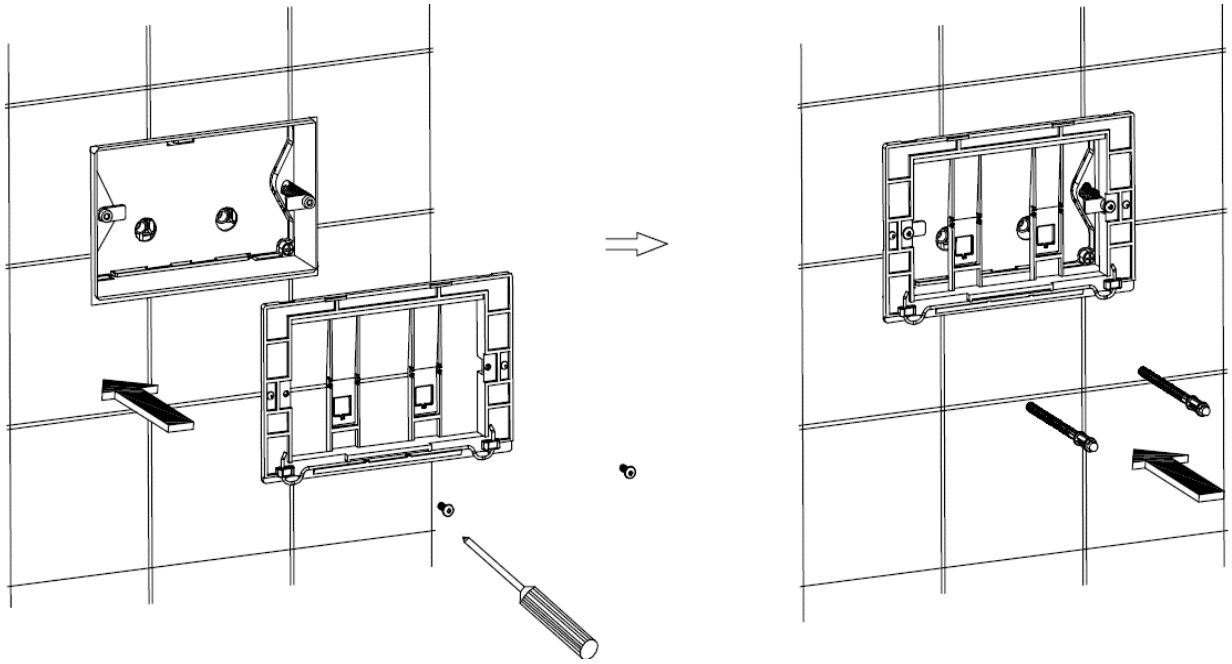

5. Once the rods are fully inserted, secure into position using the clips shown below, then push the rods to ensure free movement is achieved.

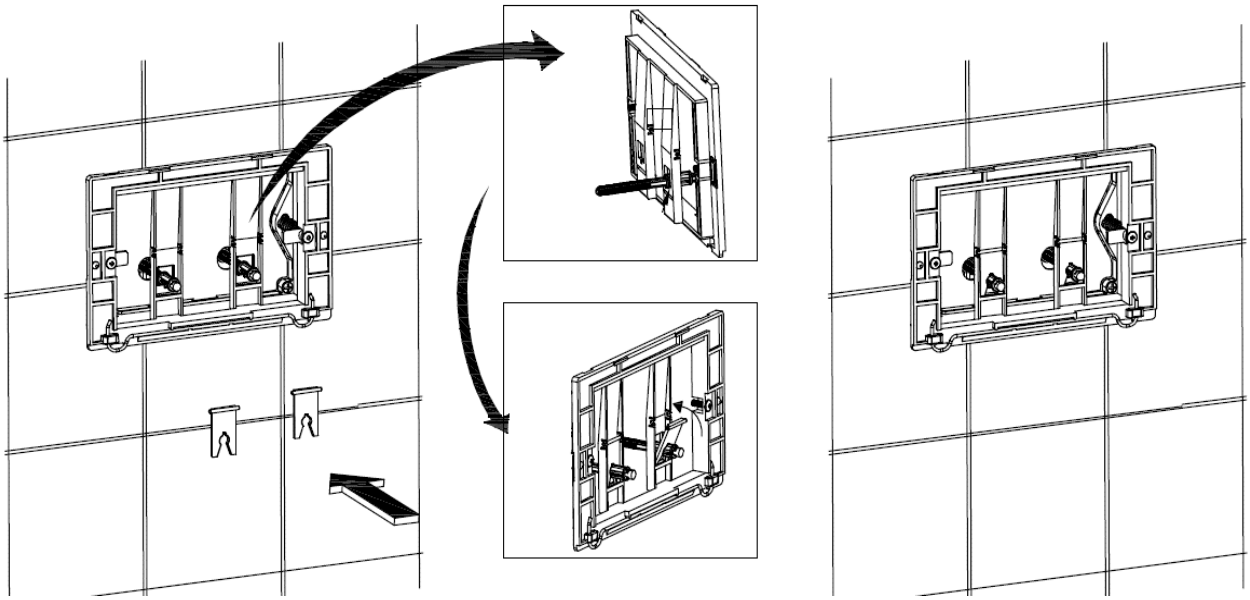

6. Attach the flush plate and click into position.

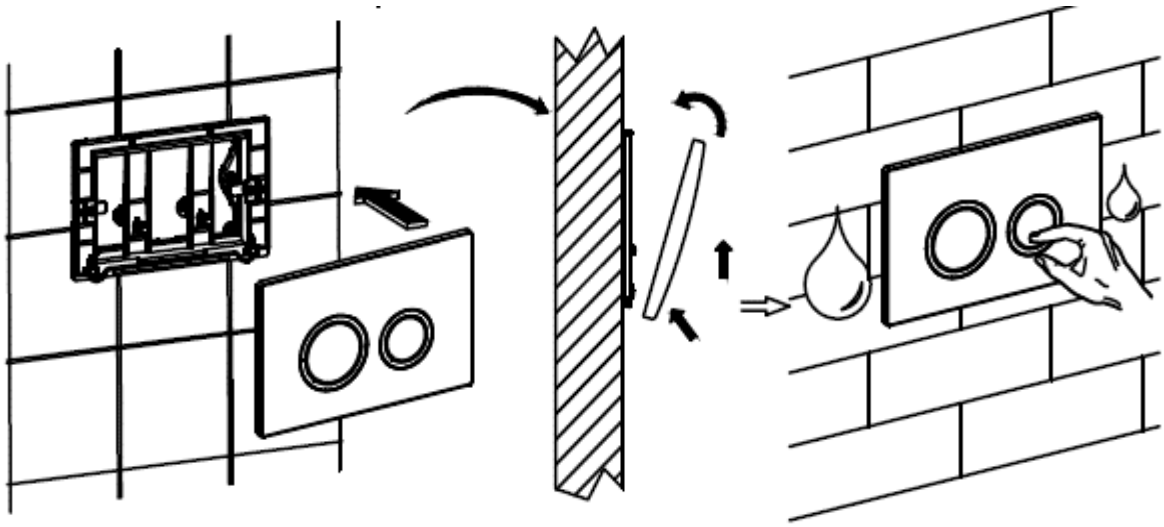

7. Remove the pan connector and flush pipe protective covers.
8. Push the straight pan connector, flush pipe and remaining parts into the holes in the frame.
9. Mark a line at the finished wall surface.

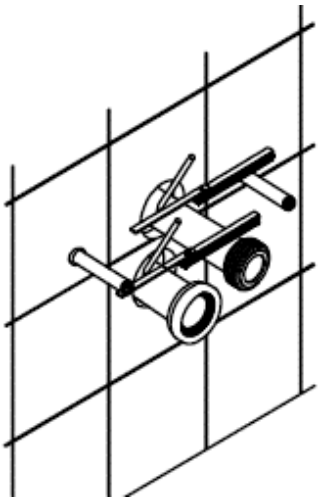

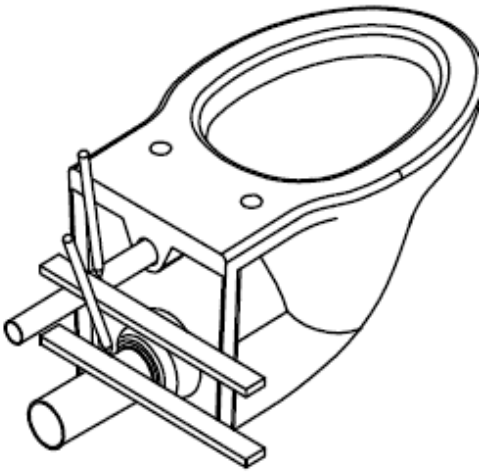

10. Remove from the frame and connect them to the flush hole and waste spigot on the rear of the toilet pan (Apply a small amount of washing up liquid to assist).

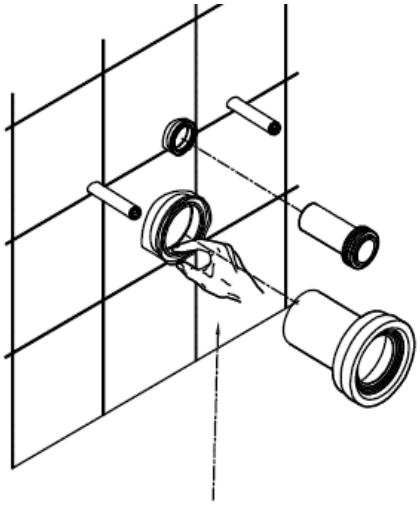

Apply Lubricant
(Washing Up Liquid)

11. Once fully connected, mark the measurements and cut as shown below.

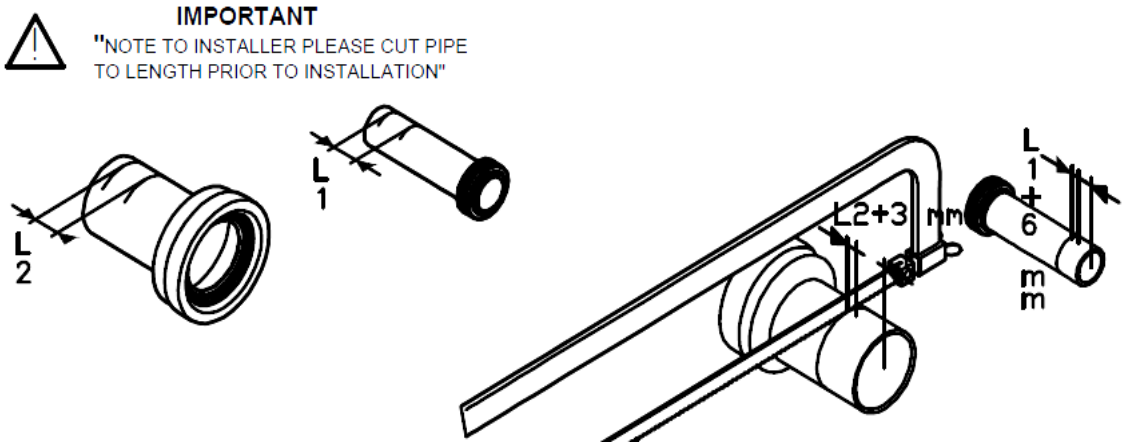

12. Prepare the flush pipe and pan connector ends removing any rough edges and create a small chamfer.

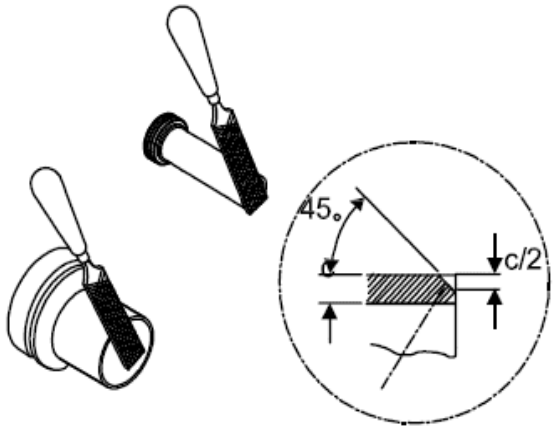

Connecting and Hanging the Toilet

1. Push the pan connector into the frame then push the flush pipe into the toilet
2. Remove the threaded bar sleeves.
3. Unscrew the threaded bars, so they extend by dimension A depth of the toilet wall + 25mm.

Please note: You will require two people for this section of the installation

4. Lift the toilet pan onto the threaded bars.
5. Finally, check that the toilet is level, connect the fixings in the order shown below and tighten until the toilet pan is secured.

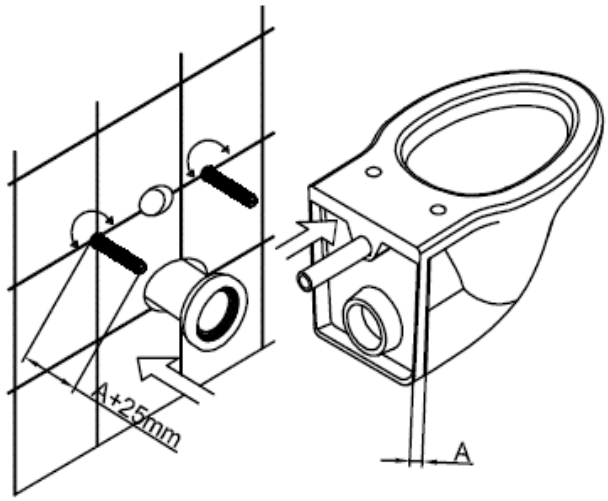

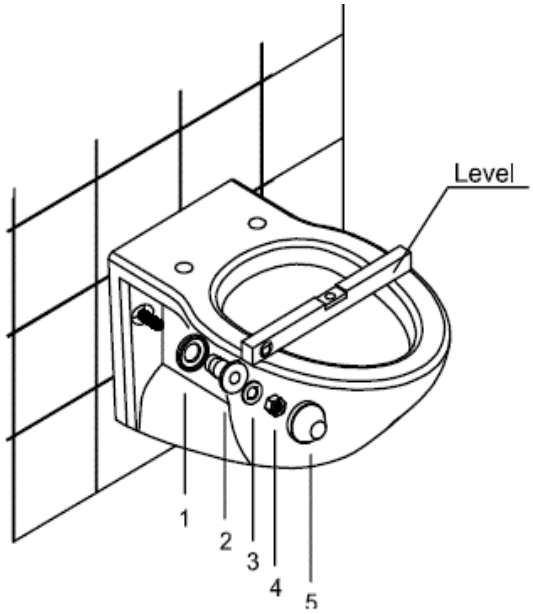

Please note: Once installation is completed a full commissioning of the product should be carried out to check the installation is safe and stable, check for leaks and check function

Troubleshooting

Cistern tank not filling at all or to the required level

1. Check the water supply has been turned back on and is reaching the cistern.
2. Adjust the fill level on the cistern as required.
3. The filter on the inlet valve could be blocked.
4. If none of these resolve the issue replace the inlet valve.

Flush volume into the pan, not sufficient

1. Adjust the flush volume level on the syphon.
2. Check that the syphon is opening correctly.
3. Check that the tubes are connected to the correct inlet on the flush plate.
4. If none of these resolve the issue replace the syphon.

Water running into the pan continually after flushing

1. Establish if the water level in the cistern is reaching the overflow on the syphon, if it does, adjust the inlet valve.
2. If this continues, replace the inlet valve.
3. If the water level does not reach the overflow on the syphon, remove the top section of the syphon and check the washer for damage.
4. If damaged replace.

Maintenance

The maintenance measures below require you to gain access to the internals of the cistern tank, and for the water supply to be turned off.

- Once you have gained access, turn the adjustment screw in the required direction to adjust the tank fill volume.
- If you need to replace the inlet valve, disconnect the water supply pipe and remove the retaining nut, which holds the inlet valve to the tank and pull the inlet valve from the tank.
- To clear the filter, unscrew the filter section from the inlet valve as shown and run under warm water using a brush to clean away any blockage.

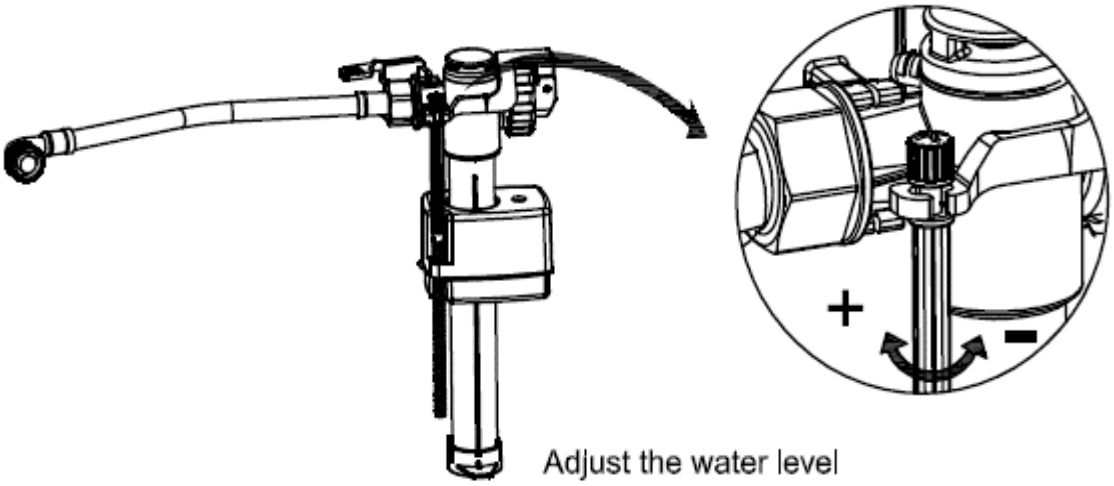

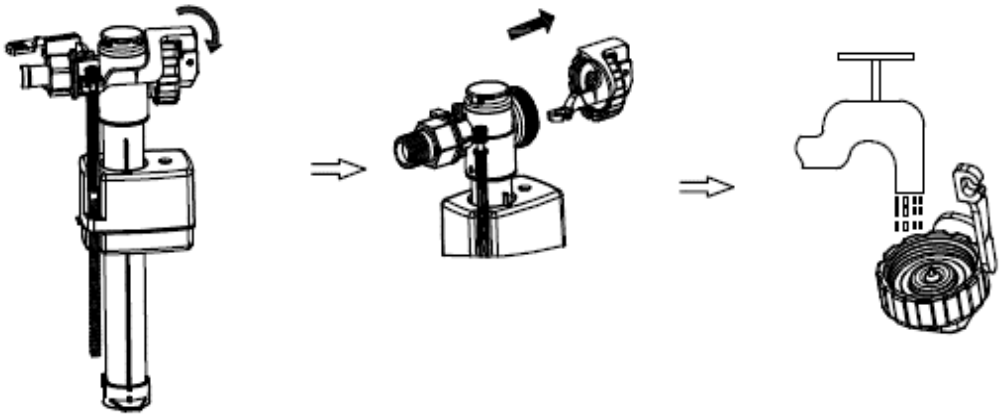

- It is recommended to remove the pneumatic tubes from the syphon to carry out maintenance.
- To do this, pull each tube from the inlet on the top of the syphon, do not allow these to drop back into the tank.
- To remove the syphon, you will only need to remove the top section, which requires you to twist and lift.
- To adjust the flush volume, move the slider as shown below.
- To remove the washer, turn the syphon upside down and the washer from the housing.

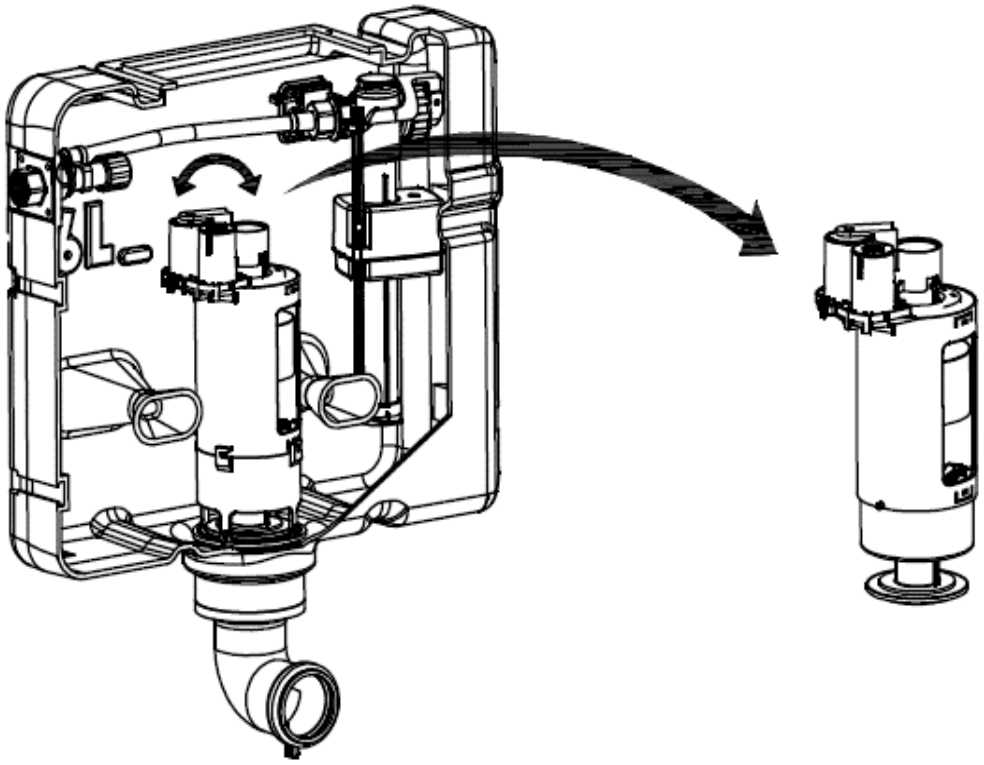

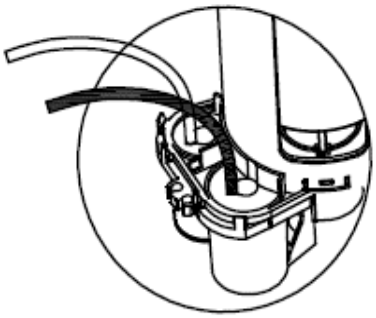

Assemble the air hose pipe

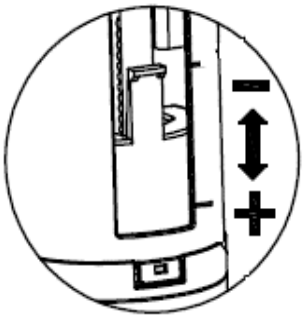

Adjust the flushing volume of the flush valve

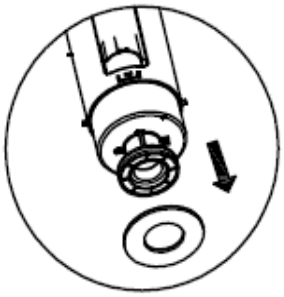

Maintenance of the seal

For more information

- visit betterbathrooms.com
- email customerservices@buyitdirect.co.uk
- call 0871 244 0935
- write to Trident Business Park, Neptune Way, Huddersfield, HD2 1UA

Better Bathrooms.com

Part of the BuyItDirect Group